Product card

CUT LED

CE

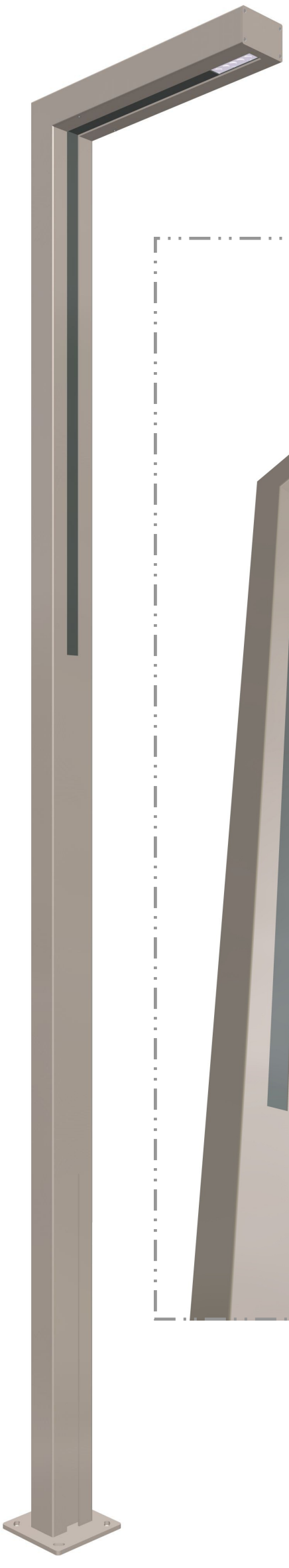

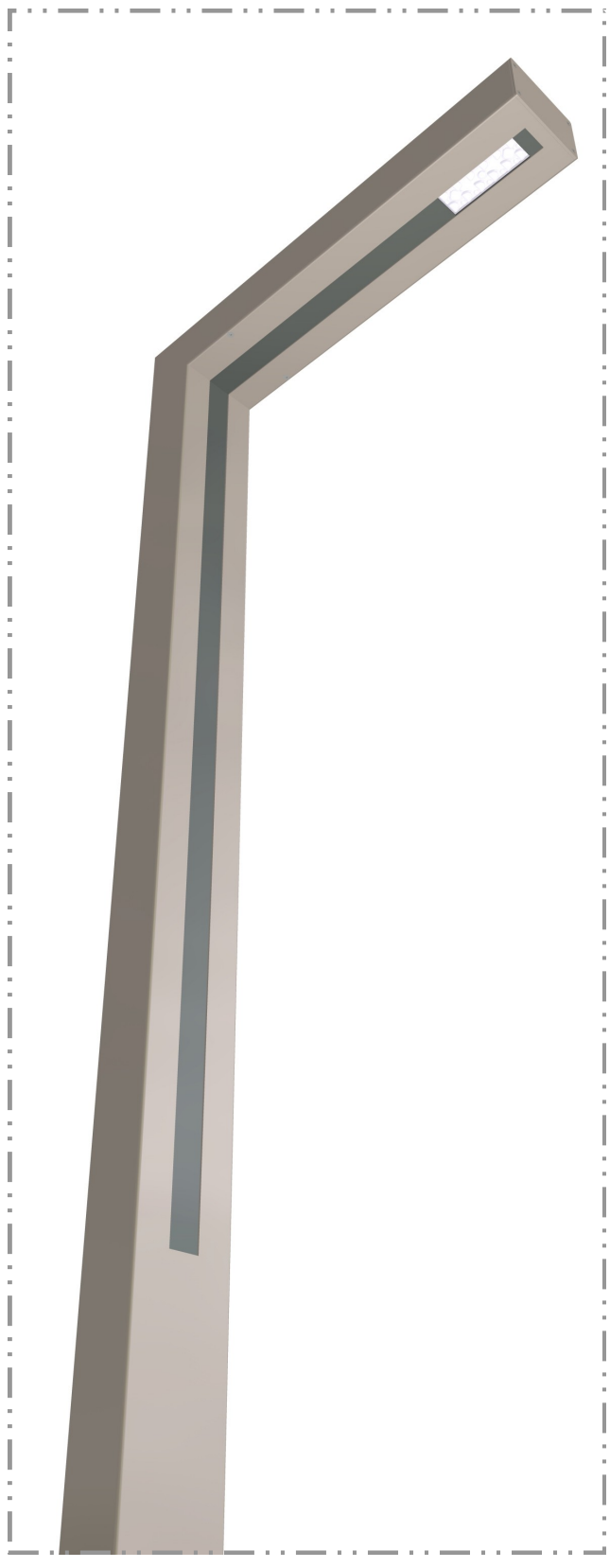

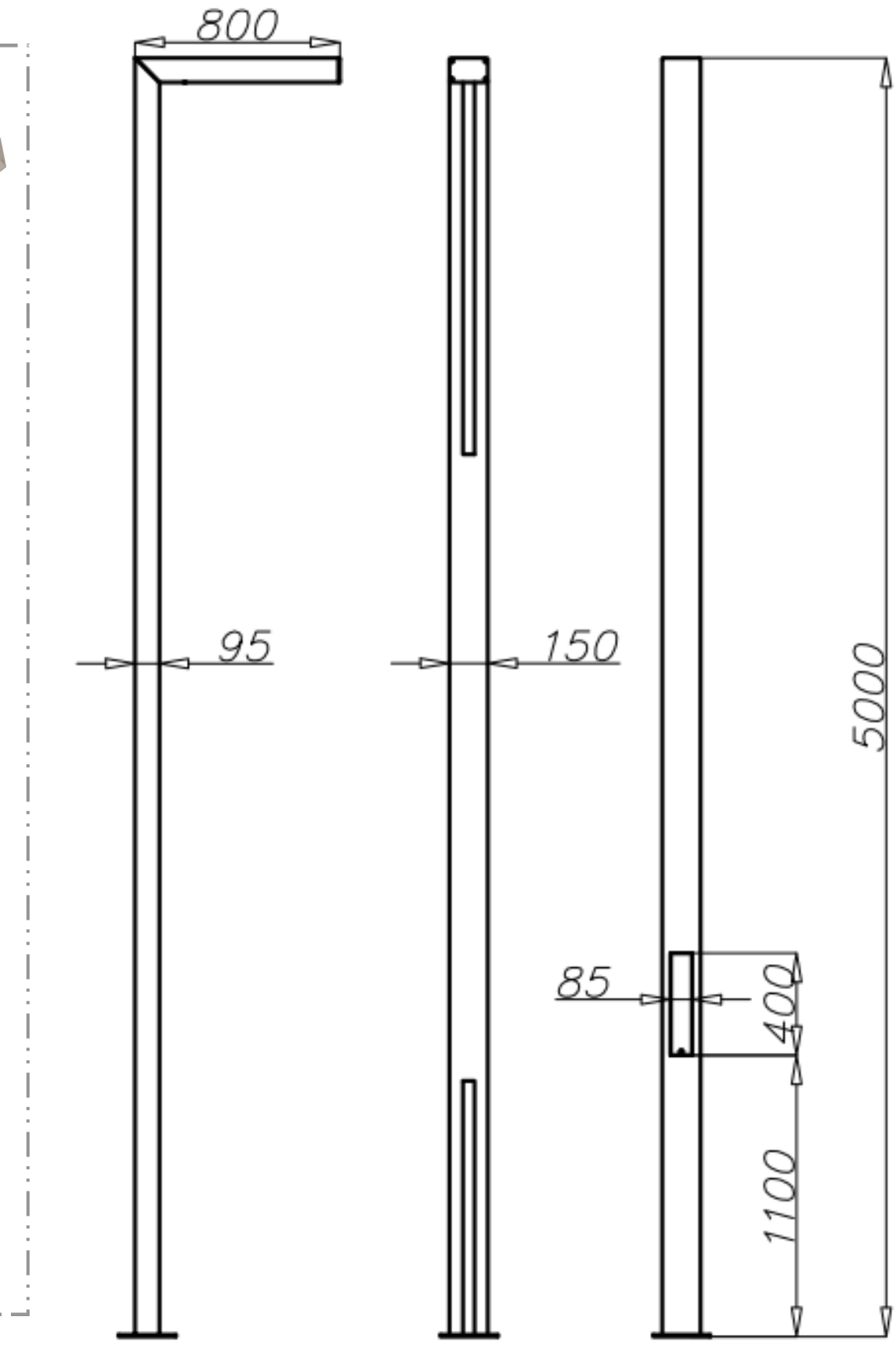

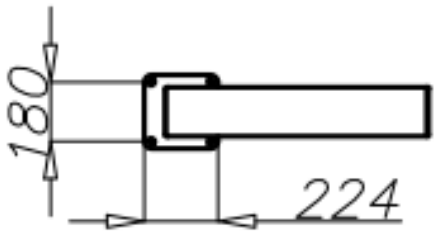

Characteristics

Protection degree IP for optical system and driver	IP 66
Insulation class	II
Voltage	120 - 277 V AC
Frequency	50/60 Hz
Operating range	from -40°C to +55°C
Material	aluminium alloy, anodized
Colour	inox
LEDs type	CREE XT-E
Colour rendering index CRI	>75
Lifetime of L70 LEDs	>50 000h
Decorative elements	Made of aluminium profiles anodized inox in standard with decorative elements made of aluminium anodized or PMMA with a possibility to use decorative lighting in theese places

Technical data

Type	CUT LED 24	CUT LED 48
Code	215430/6	215433/6
Colour temperature [K]	5 000	
LEDs power [W]	24	48
Total power [W]	31	55
Luminous efficiency [lm/W]	71	80
Luminous flux * [lm]	2 200	4 400
LEDs amount	12	24
Net weight [kg]	42	
Height H [m]	5	
Unit volume [m^3]	1,00	
Concrete footing / reinforcement basket	B-50 / Z-50	
Concrete footing code/reinforcement basket code	311150 / 311205	
Hot galvanized nut set /Hot galvanized ripable nut set	4006 / 4007	

* due to the precision class of diodes tolerance is +/- 3%

Distribution curve CUT LED 24

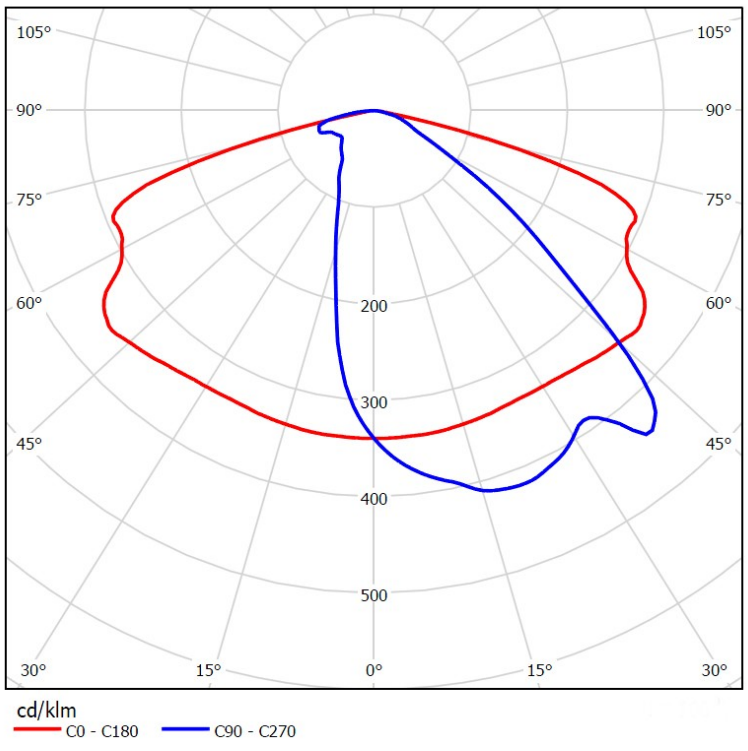

- Low Voltage Directive LVD 2006/95/WE, norm PN-EN 60598-1,
- Directive EMC 2004/108/WE, norms: PN-EN 55015, PN-EN 61547, PN-EN 61000-3-2, PN-EN 61000-3-3

- anodizing in 12 colours