Poduct card

Aluminium column SAL-B2

diameter 120 mm at the base plate

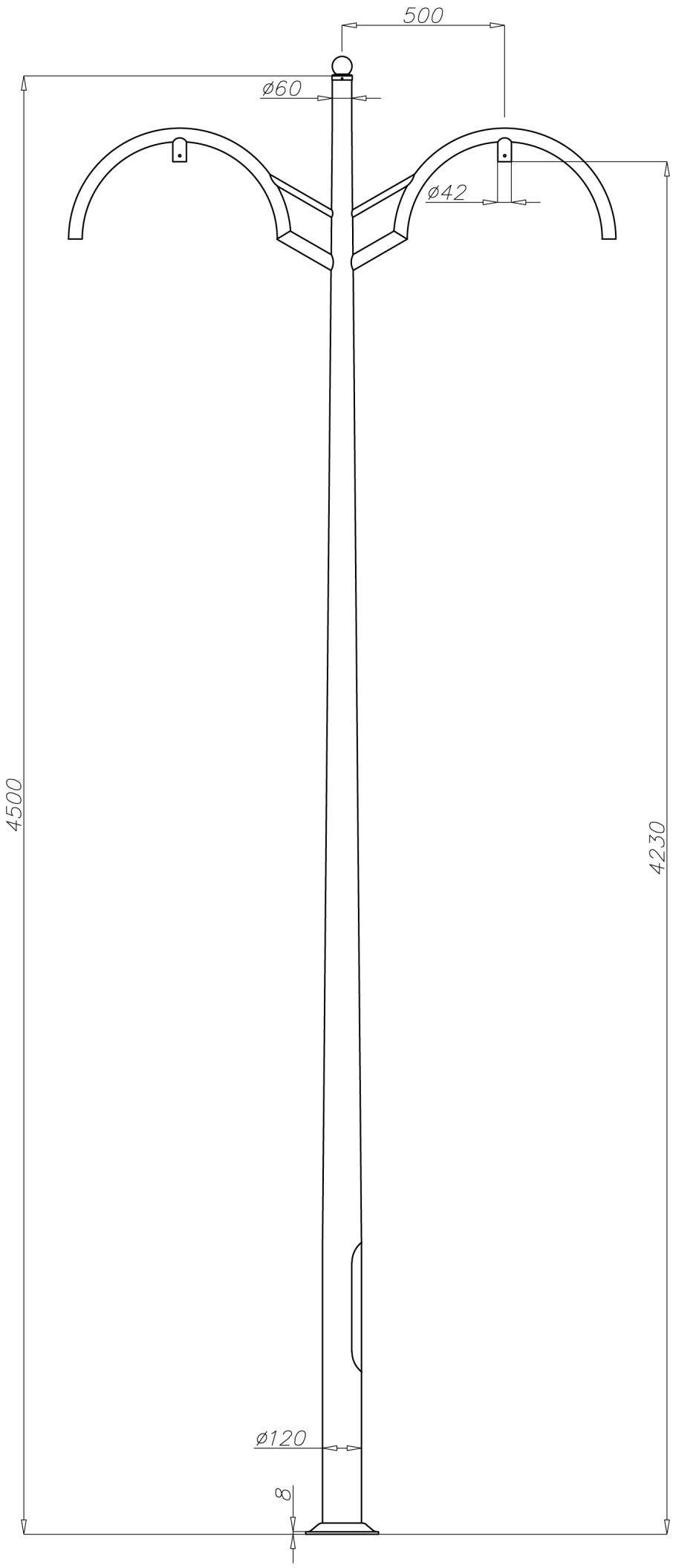

Technical data

Aluminium Column	SAL-B2
Product code	42212
Column height H [m]	4,5
Wall thickness [mm]	4
Waga netto [kg]	19,1
Volume [m^3]	0,676
Post top column	luminaires with Ø42 spigot entry with weight and windage not exceeding data in resistance calculations
Concrete footing / reinforcement basket	B-50 / Z-50
Concrete footing code/reinforcement Basket code	311150 / 311205
Hot galvanized nut set /Hot galvanized ripable nut set	4006 / 4007

Resistance calculations

SAL-B2 kod 42212	acceptable mass of single luminaire [m^2] for **Cx=1**			
	Vref. = 22 m/s	**Vref. = 24 m/s**	**Vref. = 26 m/s**	**Vref. = 28 m/s**
acceptable mass of luminaires [kg]	I zone, II location category	I and III zone, II location category to 450m AMSL	II zone, II location category	III zone, II location category to 755m AMSL
10	0,28	0,22	0,15	0,13
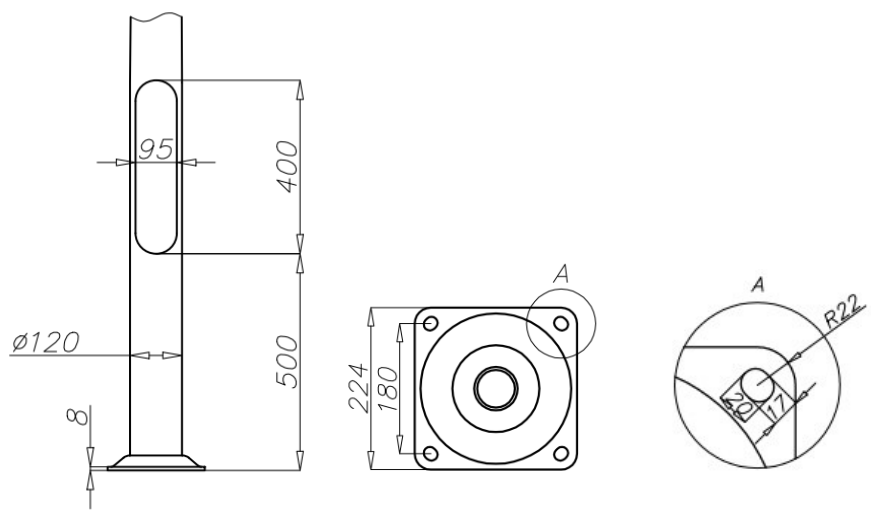
- surface: polished aluminium
- anodizing in 12 colours
- option of powder painting in RAL colours (other colours available on request)
- elastomer protection option in the color of the column to a height of 350 mm (other height on request)
- ROSA standard wiring chamber
- packing: sleeve material